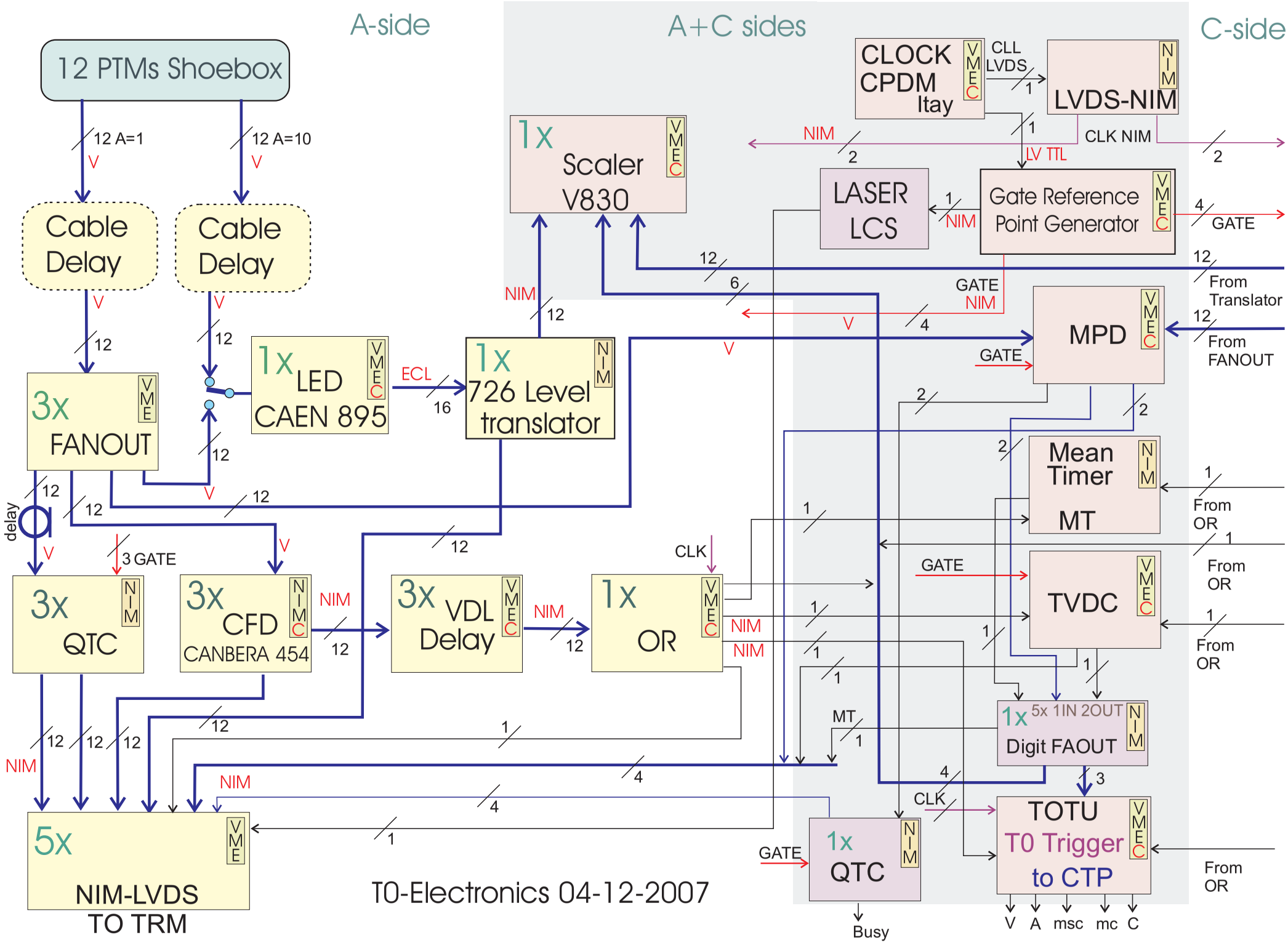
A-side
A+C sides
C-side
12 PTMs Shoebox
12 A=1
12 A=10
V
Cable Delay
Cable Delay
3x FANOUT
VME
1x LED CAEN 895
VME
ECL
16
1x 726 Level translator
NIM
1x Scaler V830
VME
NIM
12
6
CLOCK CPDM Itay
VME
CLL LVDS
LVDS-NIM
NIM
CLK NIM
LV TTL
LASER LCS
Gate Reference Point Generator
VME
GATE
From Translator
From FANOUT
MPD
VME
GATE
Mean Timer MT
NIM
From OR
TVDC
VME
From OR
From OR
delay
3 GATE
3x QTC
NIM
3x CFD CANBERA 454
NIM
3x VDL Delay
VME
1x OR
VME
CLK
NIM
MT
1x 5x 1IN 2OUT Digit FAOUT
NIM
TOTU T0 Trigger to CTP
VME
CLK
From OR
5x NIM-LVDS TO TRM
VME
1x QTC
NIM
Busy
V A msc mc C
T0-Electronics 04-12-2007