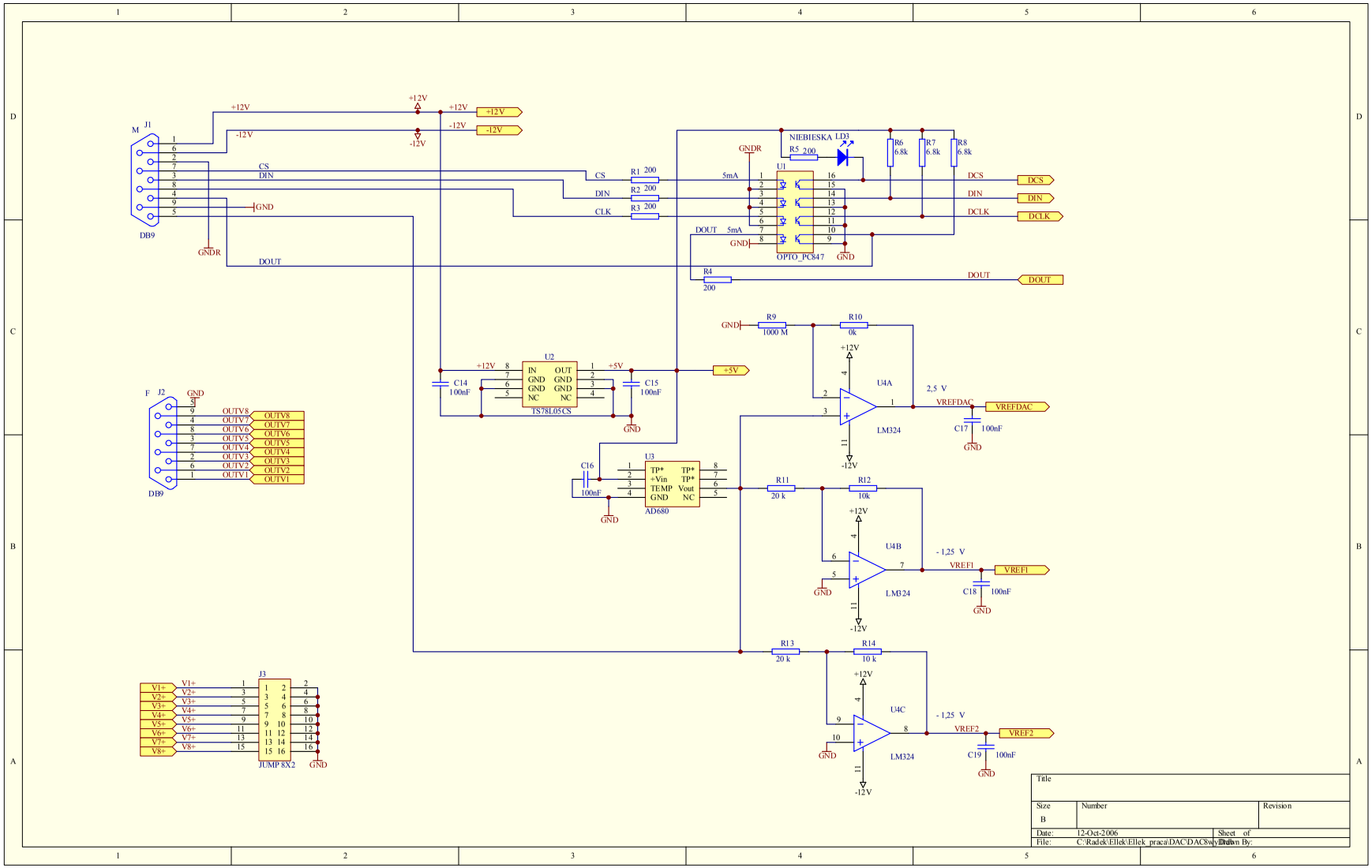
J1
DB9
+12V
-12V
CS
DIN
GND
GNDR
DOUT
R1 200
R2 200
R3 200
R4 200
R5 200
NIEBIESKA
LD3
R6 6.8k
R7 6.8k
R8 6.8k
U1
OPTO_PC847
5mA
DCS
DCLK
U2
TS78L05CS
C14 100nF
C15 100nF
+5V
J2
DB9
OUTV8
OUTV7
OUTV6
OUTV5
OUTV4
OUTV3
OUTV2
OUTV1
U3
AD680
C16 100nF
R9 1000 M
R10 0k
U4A
LM324
2,5 V
VREFDAC
C17 100nF
R11 20 k
R12 10k
U4B
- 1,25 V
VREF1
C18 100nF
R13 20 k
R14 10 k
U4C
VREF2
C19 100nF
J3
JUMP 8X2
V1+
V2+
V3+
V4+
V5+
V6+
V7+
V8+
Title
Size
B
Number
Revision
Date: 12-Oct-2006
Sheet of
File: C:\Radek\Ellek\Ellek_praca\DAC\DAC8wyj.Drawn By: